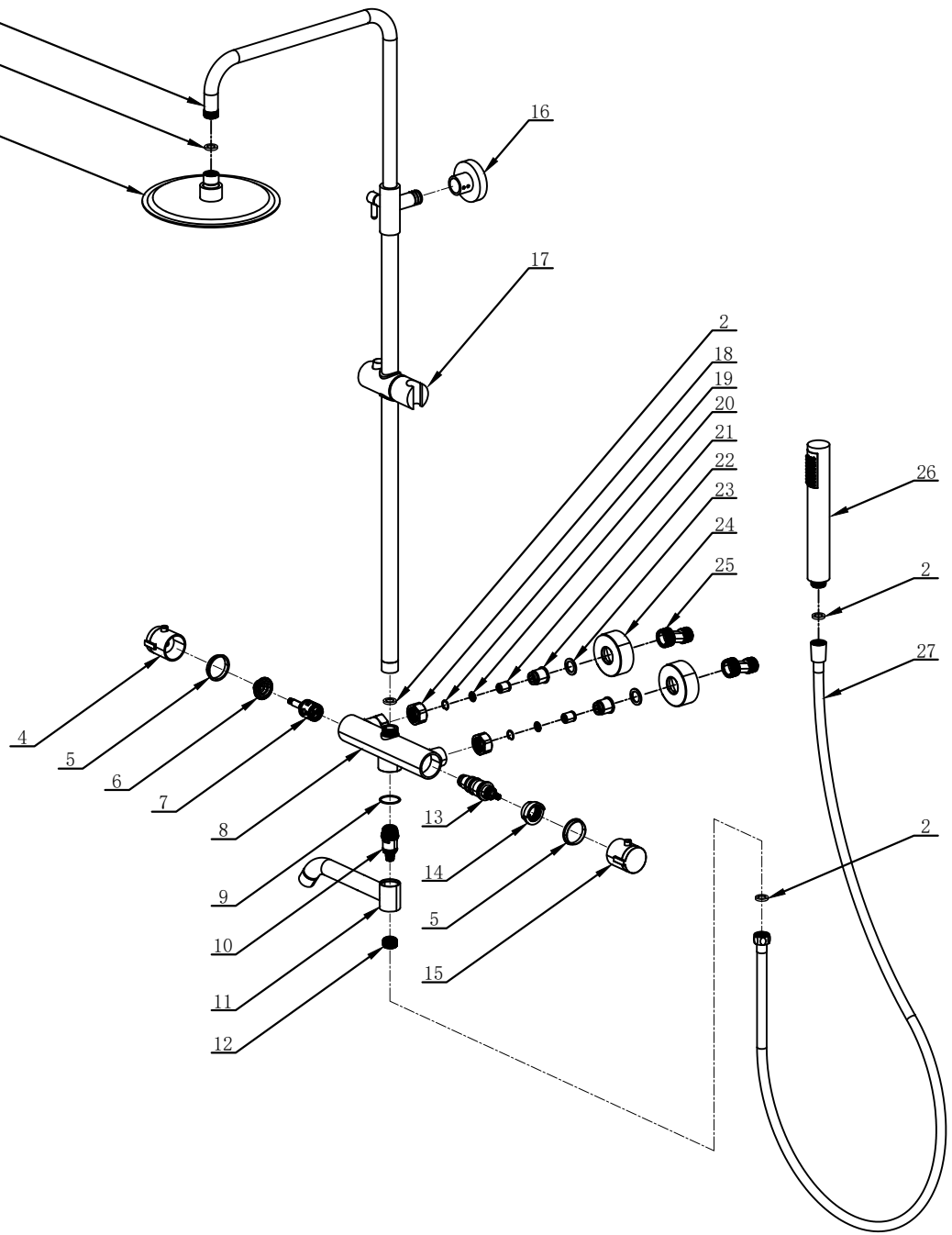

	C6612T-3BL C6612A0904 BOM LIST			
27	Flexible hose	P432	PVC	1
26	Hand shower	H3D	ABS	1
17	Hand shower holder	HSH051-1	ABS	1
16	wall support	GD06-1	ZINC	1
25	NPT connector	L19T-3A	brass	2
24	wall cover		201s/s	2
23	Gasket(G3/4)		silicon	2
22	Connector		304s/s	2
21	check valve		POM	2
20	Filter		stainless steel	2
19	Circlip		stainless steel	2
18	hexagonal hat		304s/s	2
15	Mixer Handle		ABS	1
14	temperature limiting ring		ABS	1
13	Thermostatic cartridge		brass	1
12	spout bottom connector		brass	1
11	spout		brass	1
10	Rotary cartridge		brass	1
9	Spout friction ring		POM	1
8	Faucet body		brass	1
7	diverter cartridge		ceramic	1
6	diverter cartrige nut		stainless steel	1
5	friction ring		POM	2
4	diverter handle		ABS	1
3	Shower head	T253H	304s/s	1
2	Gasket(G1/2)	QJD028	silicon	4
1	column body	Z01S	stainless steel	1
NO.	Accessories Name	Item No.	Material	QTY